SAMSUNG CONFIDENTIAL
THIS DOCUMENT CONTAINS CONFIDENTIAL
PROPRIETARY INFORMATION THAT IS
SAMSUNG ELECTRONICS CO'S PROPERTY.
DO NOT DISCLOSE TO OR DUPLICATE FOR OTHERS
EXCEPT AS AUTHORIZED BY SAMSUNG.

M346B REV0.2

2023.04.20

Sheet01 : GSM / WCDMA / LTE / NR RF
Sheet02 : TRANSCEIVER, UHB, SUB ANT
Sheet03 : CONNECTIVITY(BT/WIFI/FM), NFC
Sheet04 : AP(PAPAYA)
Sheet05 : AP(POWER), MEM(uMCP)
Sheet06 : PMIC(S2MPU13X01), IF PMIC
Sheet07 : AUDIO Codec, SENSOR, SIM, SD
Sheet08 : CAMERA
Sheet09 : DISPLAY PMIC, C2C

SAMSUNG CONFIDENTIAL
THIS DOCUMENT CONTAINS CONFIDENTIAL
AND PROPRIETARY INFORMATION OF
SAMSUNG ELECTRONICS. THIS PROPERTY
DO NOT DISCLOSE TO OR DUPLICATE FOR OTHERS
EXCEPT AS AUTHORIZED BY SAMSUNG.

RF PART 1

2G	850/ 900/ 1800 / 1900
3G	W1/ 2/ 4/ 5/ 8
FDD	B1/2/3/4/5/7/8/12/17/20/26/28/66
TDD	B38/40/41
NR	n1/3/5/7/8/28/38/40/41/66/78

MIMO(4x4)	n7/38/41/78
SRS	1T4R, n41/78
DL CA	
UL CA	3C, 7C, 38C, 40C
HPUE	

APT0 LMB PA

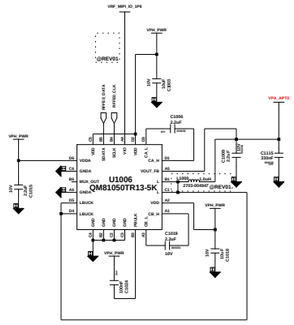

APT1 MHB PA

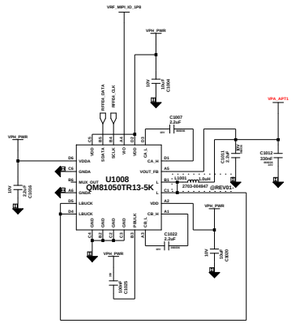

APT2

NOT USE (VE)

@REV01

MAIN ANT1
LB TRX

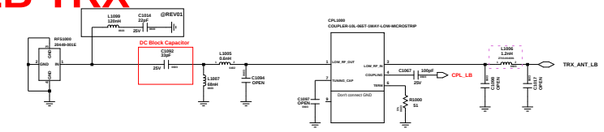

@REV01

MAIN ANT2
MB/HB TRX

HB FE

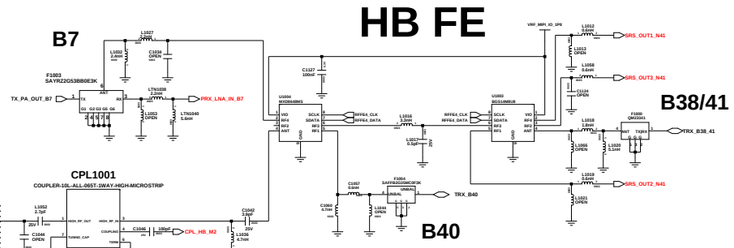

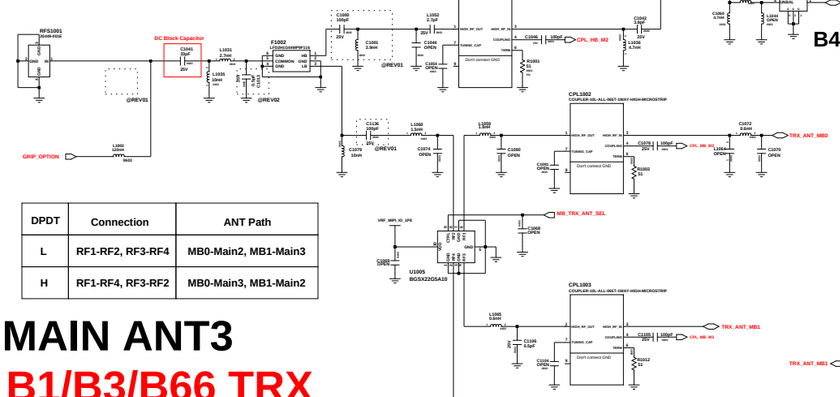

DPDT	Connection	ANT Path
L	RF1-RF2, RF3-RF4	MB0-Main2, MB1-Main3
H	RF1-RF4, RF3-RF2	MB0-Main3, MB1-Main2

MAIN ANT3
B1/B3/B66 TRX
(for M-M/M-H ENDC)

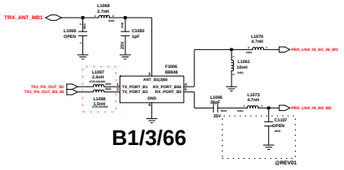

B1/3/66

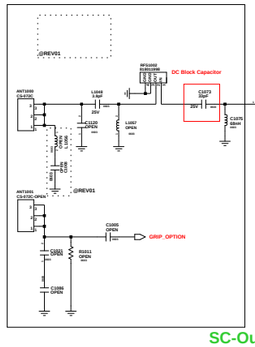

SC-Outer

LTE	ANT	NR	ANT
LB(TX1)	Not Support	LB(TX2)	Not Support
LB(TX1)	M1	MB(TX2)	M2
LB(TX1)	M1	HB(TX2)	M2
LB(TX1)	M1	UHB(TX2)	S3

LTE	ANT	NR	ANT
MB(TX2)	M2	LB(TX1)	M1
MB(TX2)	M3	MB(TX1)	M2
MB(TX1)	M3	HB(TX2)	M2
MB(TX1)	M2	UHB(TX2)	S3

LTE	ANT	NR	ANT
HB(TX2)	M2	LB(TX1)	M1
HB(TX2)	M2	MB(TX1)	M3
HB(TX1)	Not Support	HB(TX2)	Not Support
HB(TX1)	M2	UHB(TX2)	S3

LMB FEMid

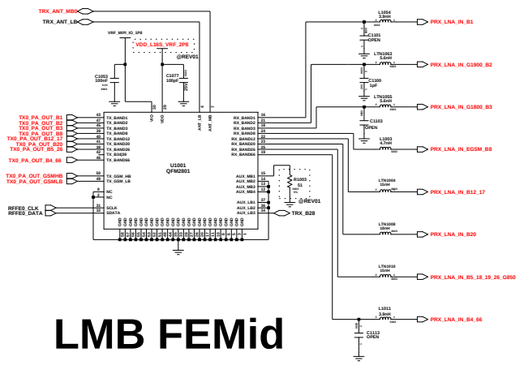

B28_DPX

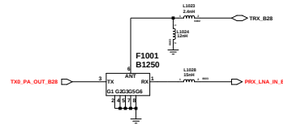

PRX LNA BANK

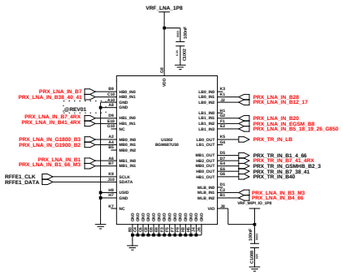

LTE	NR	LTE PA	NR PA
LB(TX1)	LB(TX2)	Not Support	
LB(TX1)	MB(TX2)	LMB (APT0)	MHB (APT1)
LB(TX1)	HB(TX2)	LMB (APT0)	MHB (APT1)
LB(TX1)	UHB(TX2)	LMB (APT0)	UHB (VBAT)

LTE	NR	LTE PA	NR PA
MB(TX2)	LB(TX1)	MHB (APT1)	LMB (APT0)
MB(TX1)	MB(TX2)	LMB (APT0)	MHB (APT1)
MB(TX1)	HB(TX2)	LMB (APT0)	MHB (APT1)
MB(TX1)	UHB(TX2)	LMB (APT0)	UHB (VBAT)

LTE	NR	LTE PA	NR PA
HB(TX2)	LB(TX1)	MHB (APT1)	LMB (APT0)
HB(TX2)	MB(TX1)	MHB (APT1)	LMB (APT0)
HB(TX1)	HB(TX2)	Not Support	
HB(TX1)	UHB(TX2)	MHB (APT1)	UHB (VBAT)

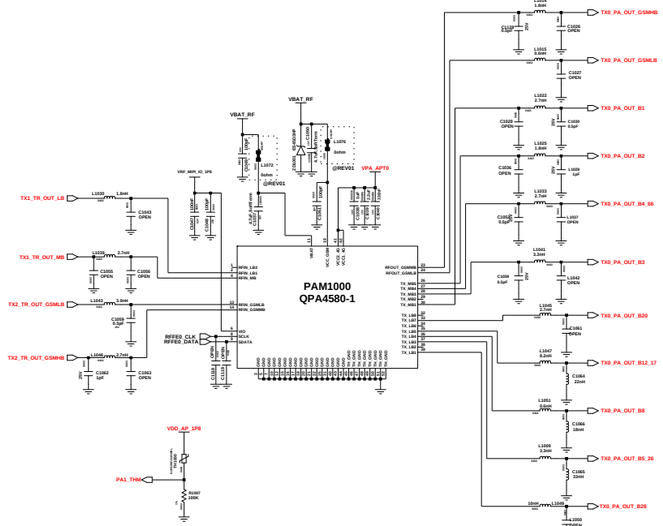

LMB PA THM

2G/LMB MMMB (LMB-TX1, 2G-TX2)

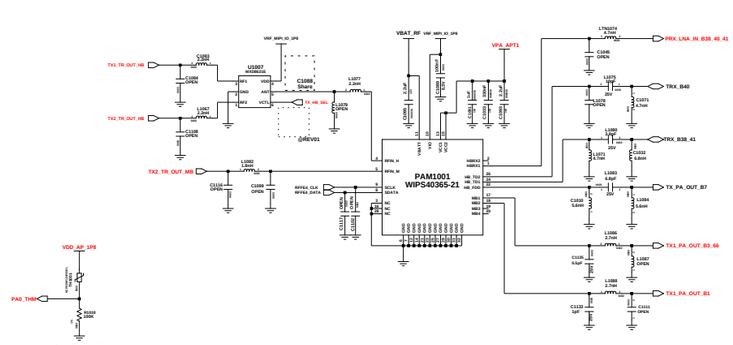

MHB PA THM

MHB MMMB(MB-TX2, HB-TX1/2)

Engineer:	
Drawn by:	M34 5G (Papaya)
R&D Code:	TITLE: RF PAM/FEM/APT
DOC CTRL Code:	Size: A0
RFE DOCR Code:	
QA Code:	REV: Drawing Number:

Changed by: Date Changed: Time Changed:

SAMSUNG CONFIDENTIAL
THIS DOCUMENT CONTAINS CONFIDENTIAL
AND PROPRIETARY INFORMATION OF
SAMSUNG ELECTRONICS. THIS PROPERTY
DO NOT DISCLOSE TO OR DUPLICATE FOR OTHERS
EXCEPT AS AUTHORIZED BY SAMSUNG.

TRANSCEIVER (S5511)

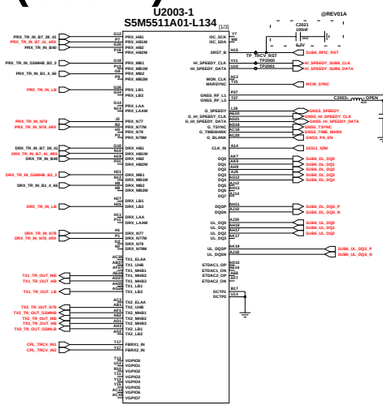

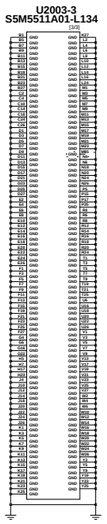

Coupling SW

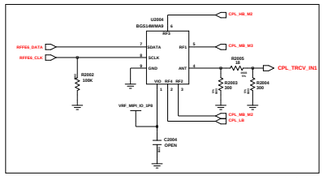

SC_inner

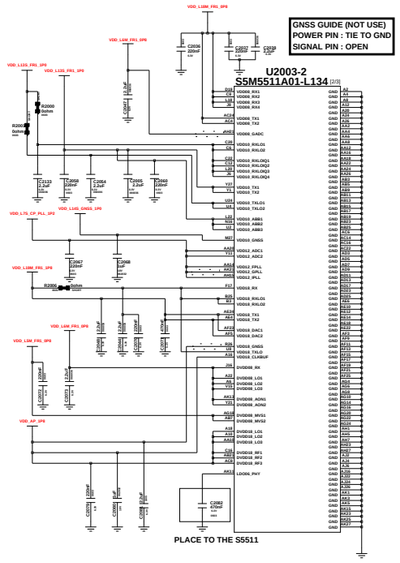

RFFE	RF MIPI Assigned
0	PRX FEMid, LBM MMMB, APT0
1	PRX/PRX MIMO - LNA
2	N78 PA, N78 SRS SW
3	DRX/DRX MIMO - FEM, LNA
4	PRX HB SP4T, MHB MMMB, APT1, N41 SRS SW
5	
6	FBRX SP4T, ANT SW
7	SubPCB ANT SW

SUB ANT1

DRX_L/M/H

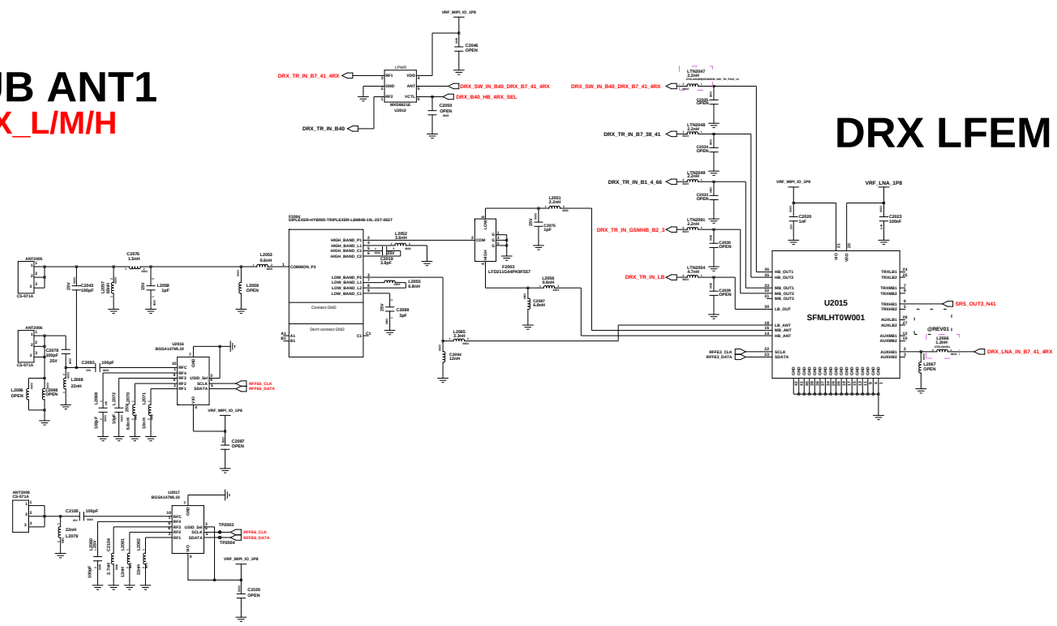

SUB ANT2

N77/78 DRX MIMO

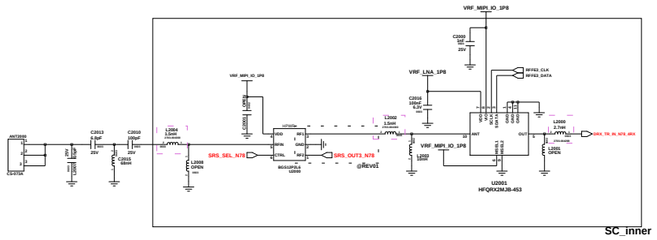

SC_inner

SUB ANT3

N78 TRX

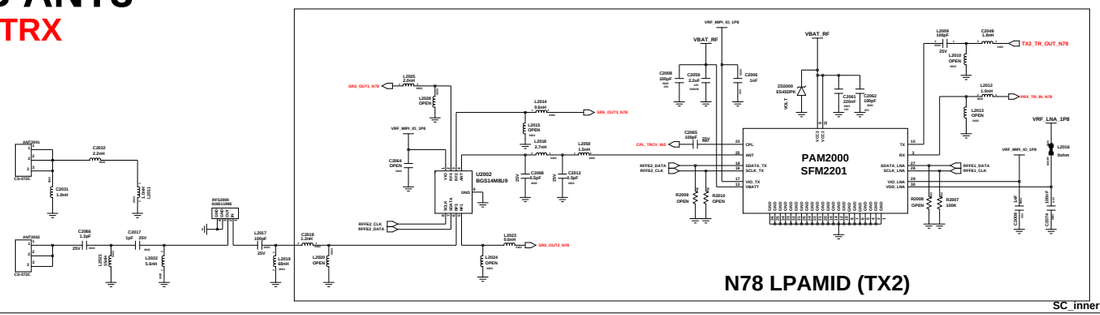

SC_inner

SUB ANT4

N77/78 DRX
HB_DRX_MIMO

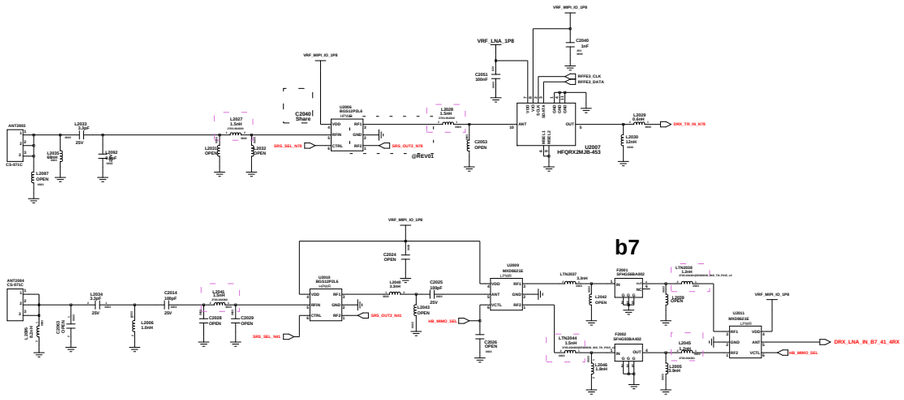

SUB ANT5

HB PRX MIMO
N77/78 PRX MIMO

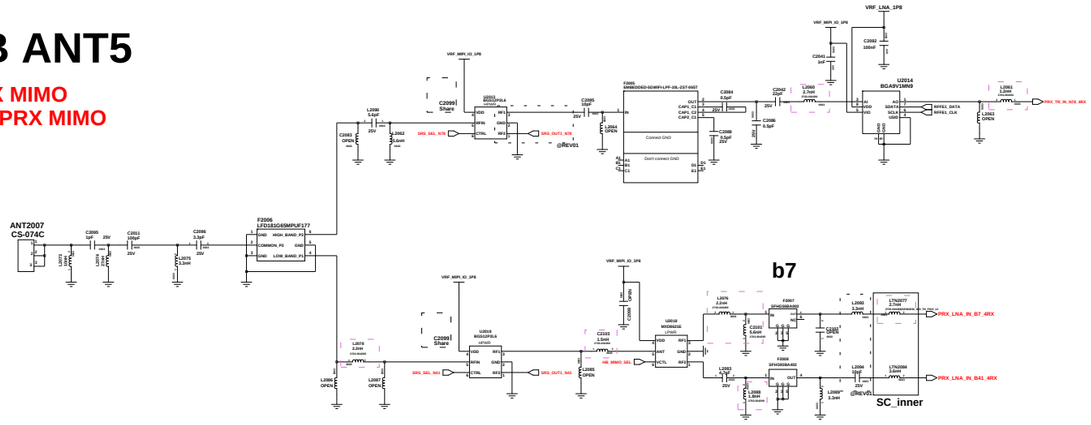

SC_inner

Engineer:	M34 5G (Papaya)
Issue by:	
Part Code:	TITLE: RF TRCV/UHB/DRX
DCL CTRL CMD:	
SPR Issue date:	
Changed by: / Date Changed: / Date Changed:	Qa Code: / Rev: / Drawing Number:

SAMSUNG CONFIDENTIAL
THIS DOCUMENT CONTAINS CONFIDENTIAL
PROPRIETARY INFORMATION THAT IS
SAMSUNG ELECTRONICS CO'S PROPERTY.
DO NOT DISCLOSE TO OR DUPLICATE FOR OTHERS
EXCEPT AS AUTHORIZED BY SAMSUNG.

WIFI/BT/FM

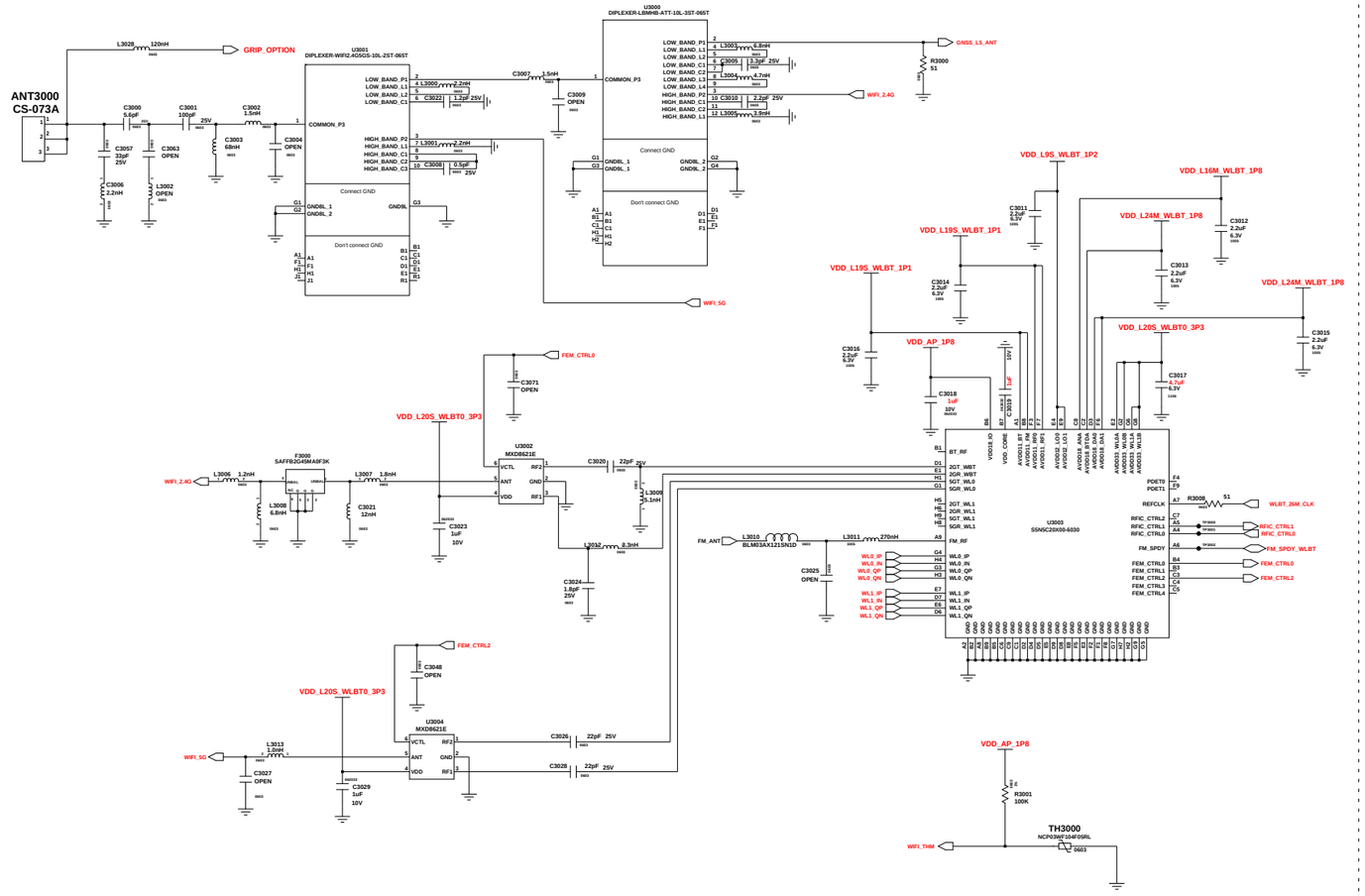

LCD SMR gasket

GND

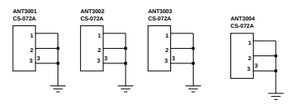

NFC

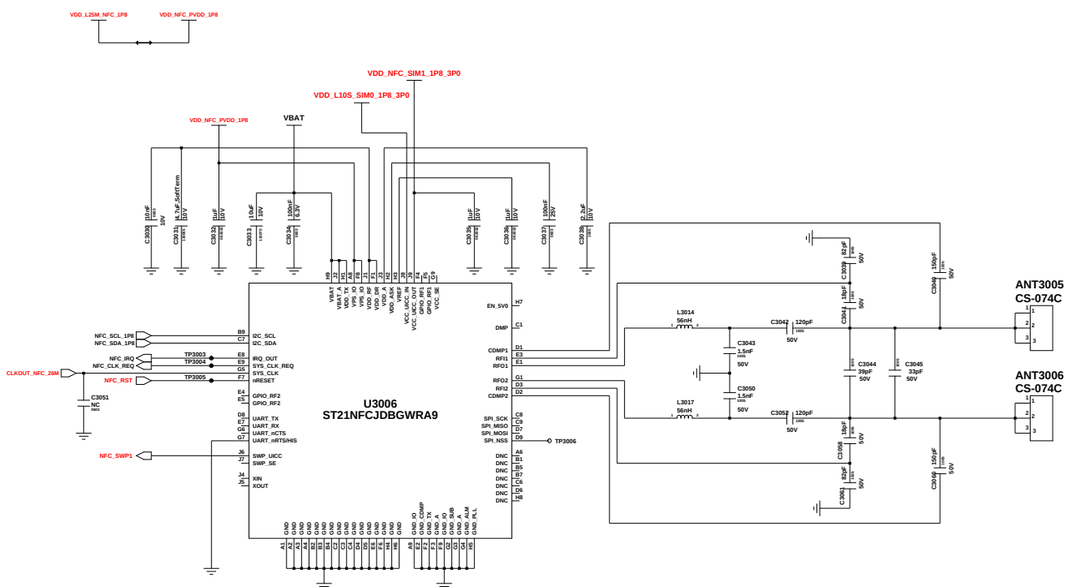

GNSS L1

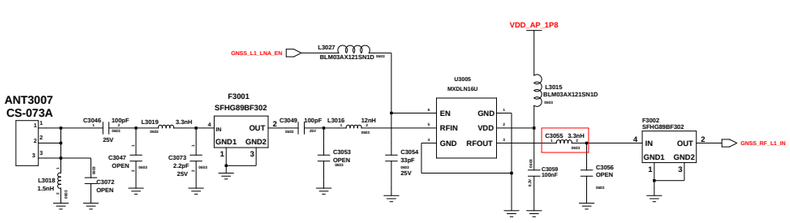

GNSS L5(Not used)

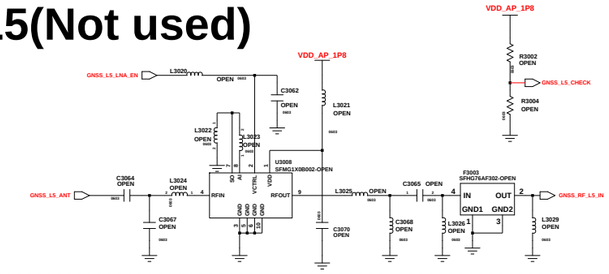

GRIP IC

@REV01

Engineer:	M34 5G (Papaya)
Drawn by:	
R&D CHK:	TITLE: WIFI/NFC/GPS
DOC CTRL CHK:	Size: A1
MFG ENGR CHK:	
QA CHK:	REV: Drawing Number: Page: 3

Changed by: user118 | Date Changed: | Time Changed:

SAMSUNG CONFIDENTIAL
THIS DOCUMENT CONTAINS CONFIDENTIAL PROPRIETARY INFORMATION THAT IS SAMSUNG ELECTRONICS CO'S PROPERTY. DO NOT DISCLOSE TO OR DUPLICATE FOR OTHERS EXCEPT AS AUTHORIZED BY SAMSUNG.

PAPAYA

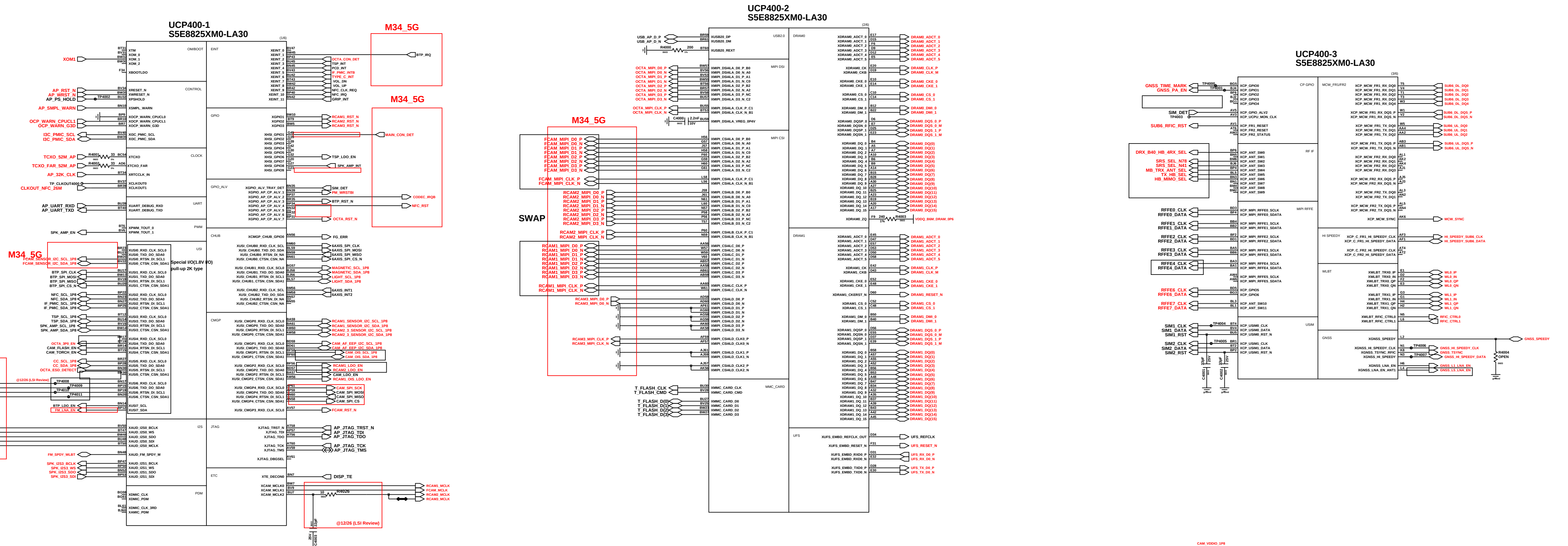

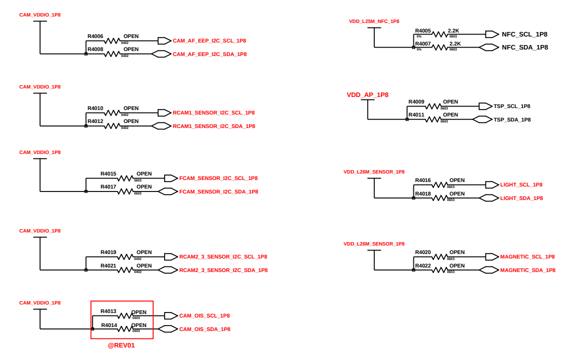

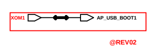

PIN [3:1]	Function	
OM[2:0]	1st Boot	2nd Boot
000	UFS	USB
001	-----	USB
010	USB	-----
100	SD	USB

iROM BOOT

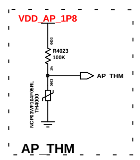

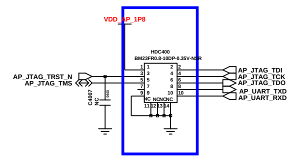

AP JTAG

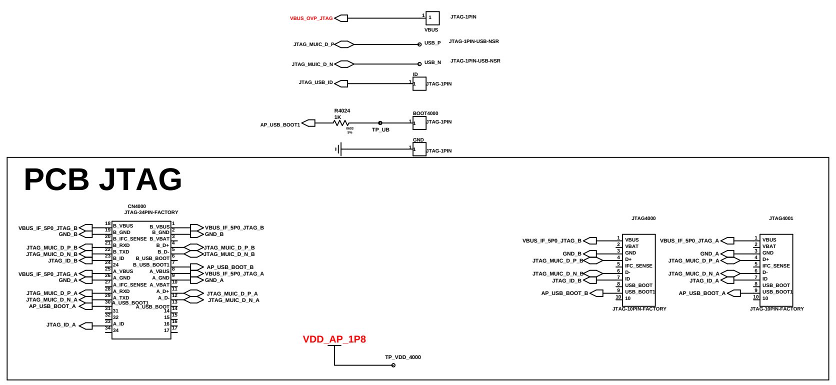

PCB JTAG

SYSTEM CLOCK

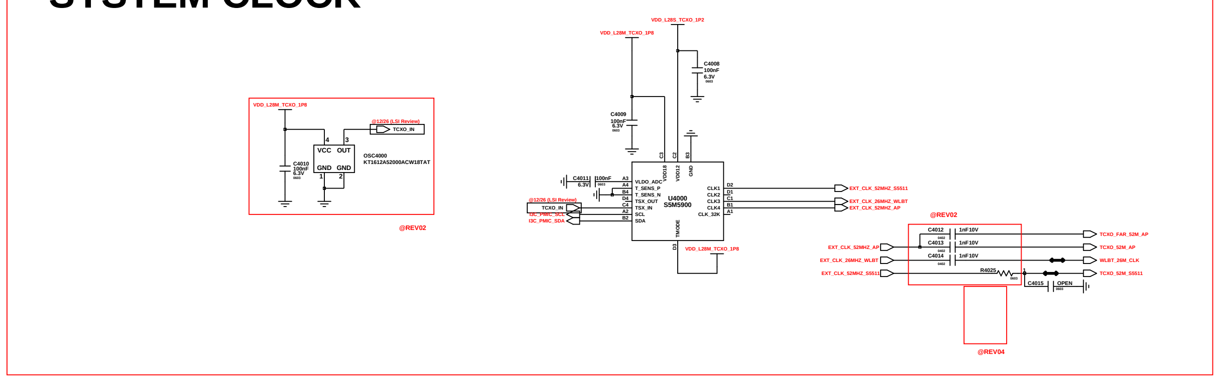

SAMSUNG ELECTRONICS

SAMSUNG CONFIDENTIAL
THIS DOCUMENT CONTAINS CONFIDENTIAL
PROPRIETARY INFORMATION THAT IS
SAMSUNG ELECTRONICS CO'S PROPERTY.
DO NOT DISCLOSE TO OR DUPLICATE FOR OTHERS
EXCEPT AS AUTHORIZED BY SAMSUNG.

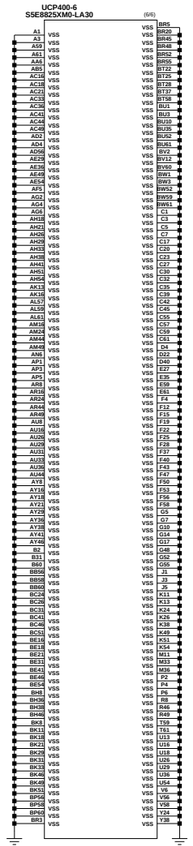

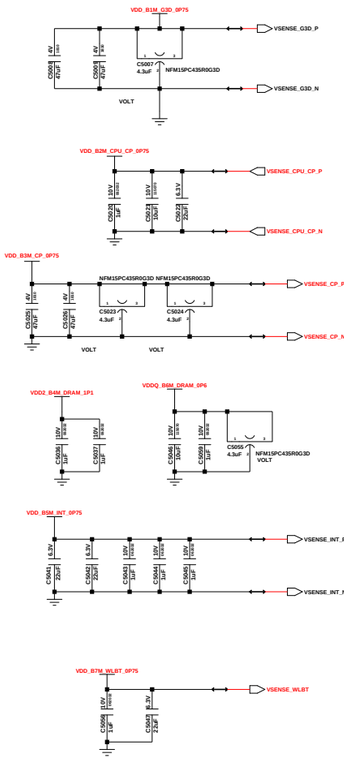

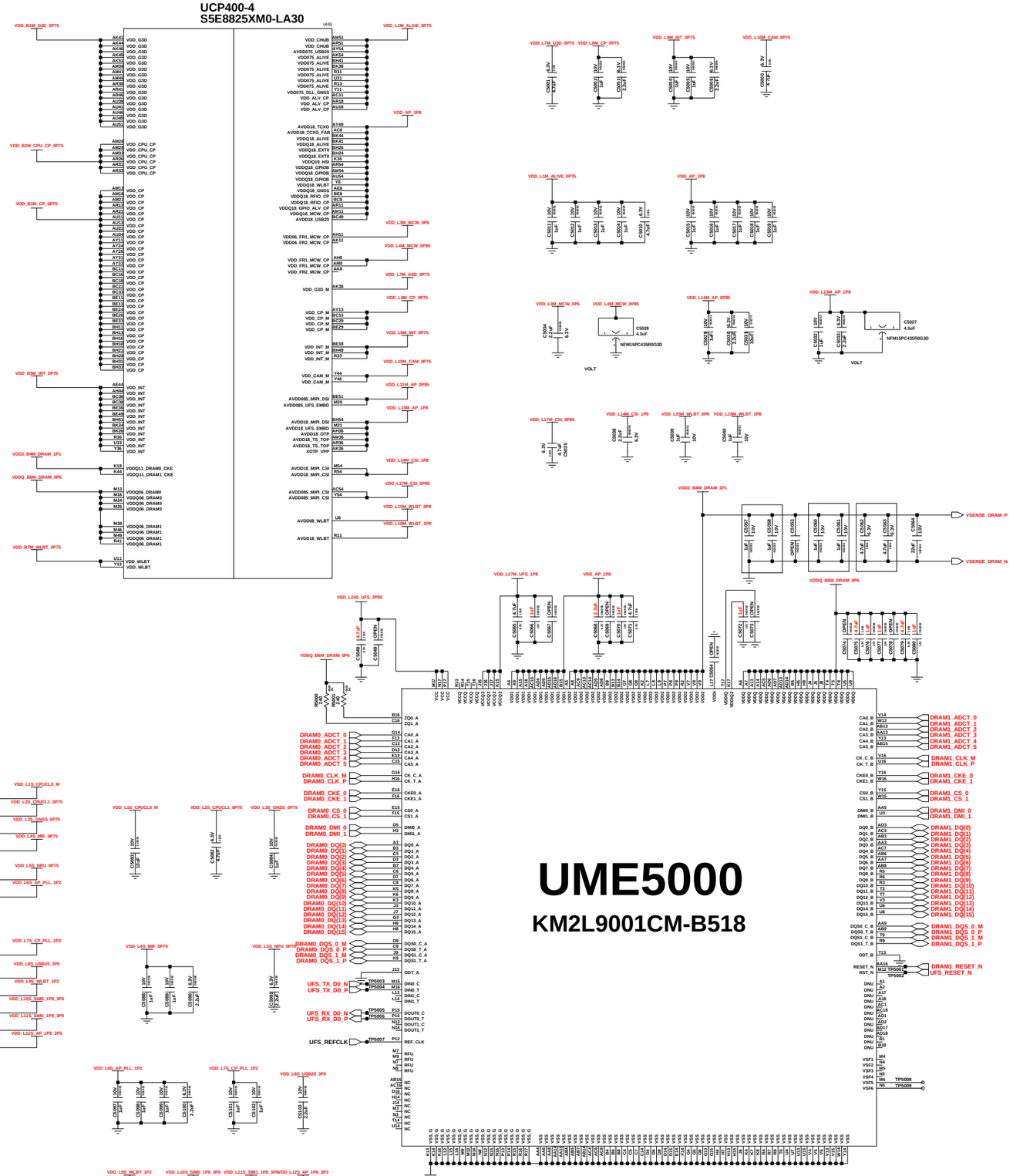

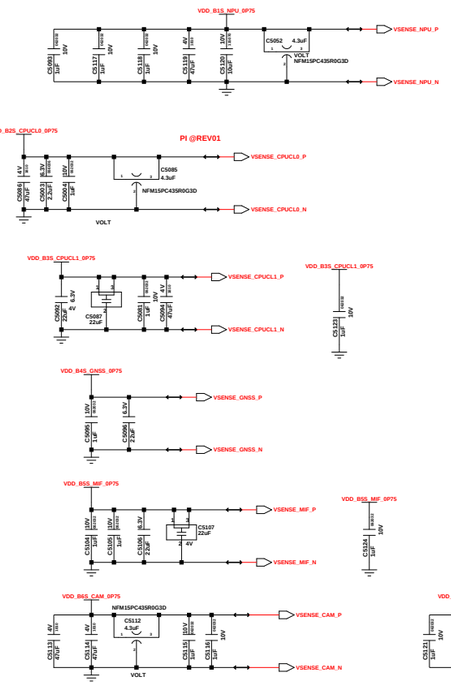

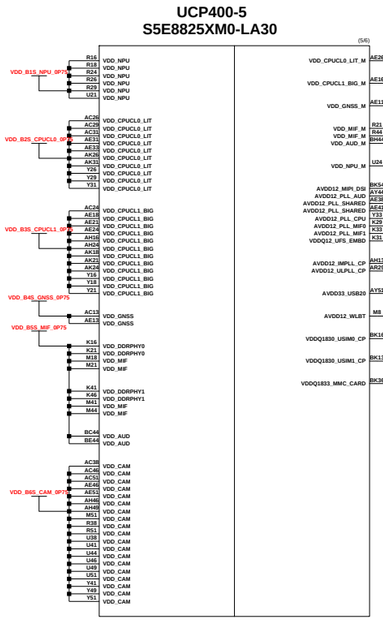

UME5000

KM2L9001CM-B518

6GB + 128GB uMCP : 1108-000714
8GB + 128GB uMCP : 1108-000721
8GB + 256GB uMCP : 1108-000722

6GB + 128GB uMCP

Engineer:	M34_5G (Papaya)
Drawn by:	
R&D CHK:	TITLE: AP/CP/uMCP
DOC CTRL CHK:	Size: A1
MFG ENGR CHK:	
QA CHK:	

Changed by:	Date Changed:	Time Changed:	REV	Drawing Number:	Page:

SAMSUNG CONFIDENTIAL
THIS DOCUMENT CONTAINS CONFIDENTIAL
AND PROPRIETARY INFORMATION OF
SAMSUNG ELECTRONICS CO'S PROPERTY.
DO NOT DISCLOSE TO OR DUPLICATE FOR OTHERS
EXCEPT AS AUTHORIZED BY SAMSUNG.

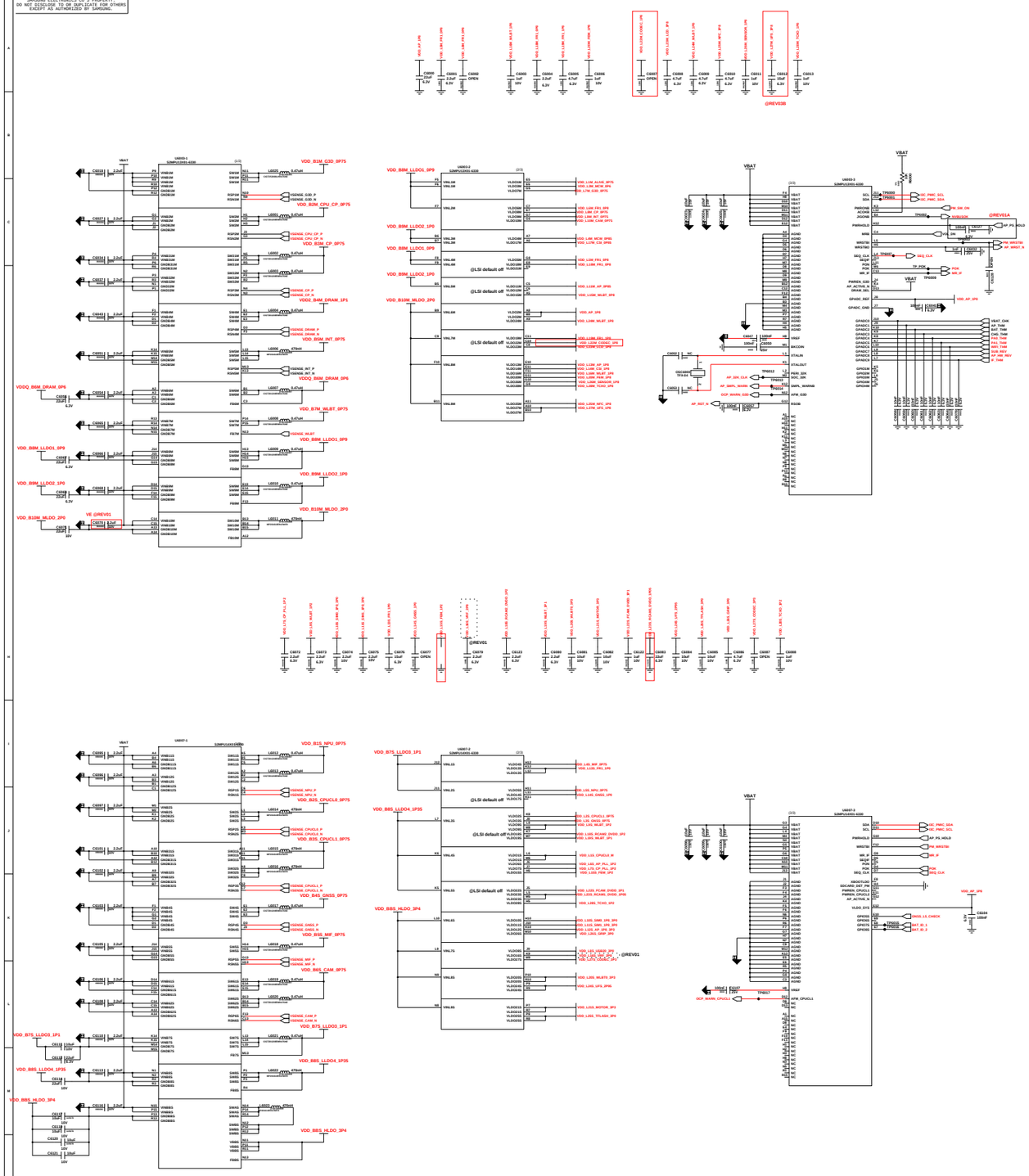

DIRECT CHARGER

IF PMIC

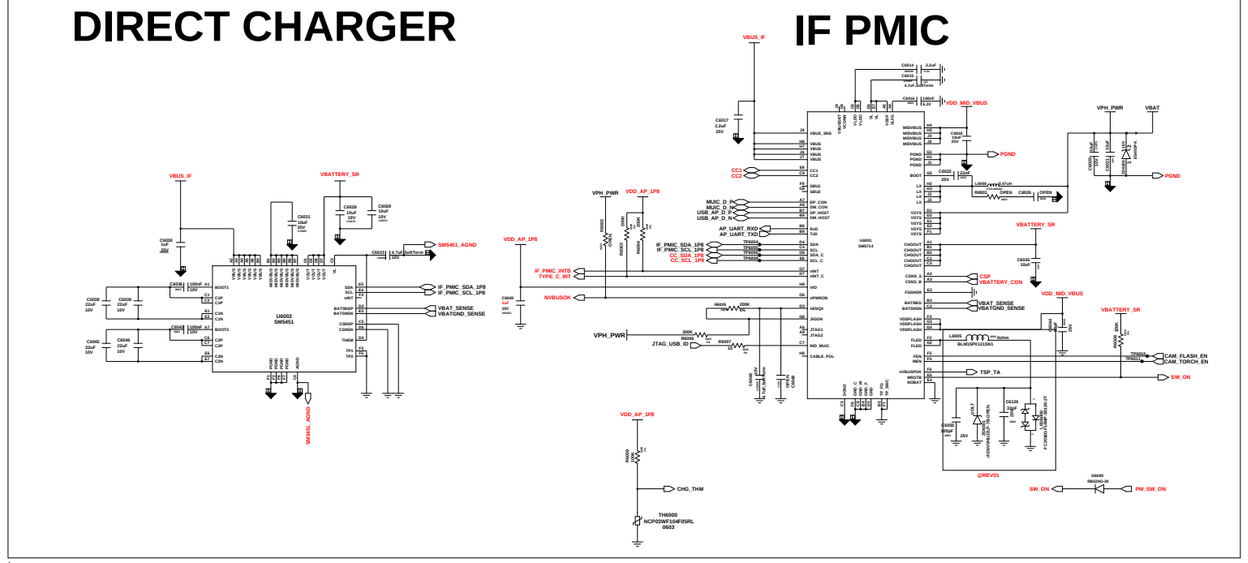

BATTERY SWELLING

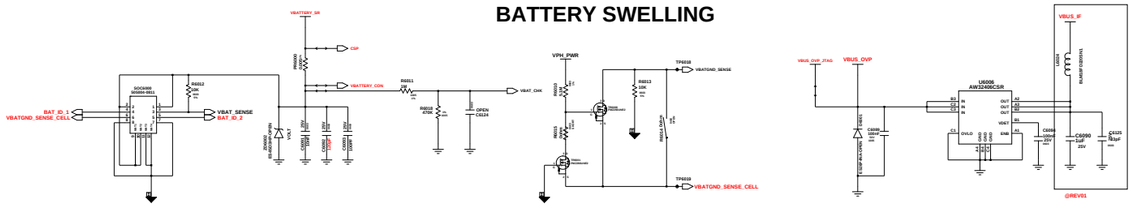

BATTERY CON

OVP

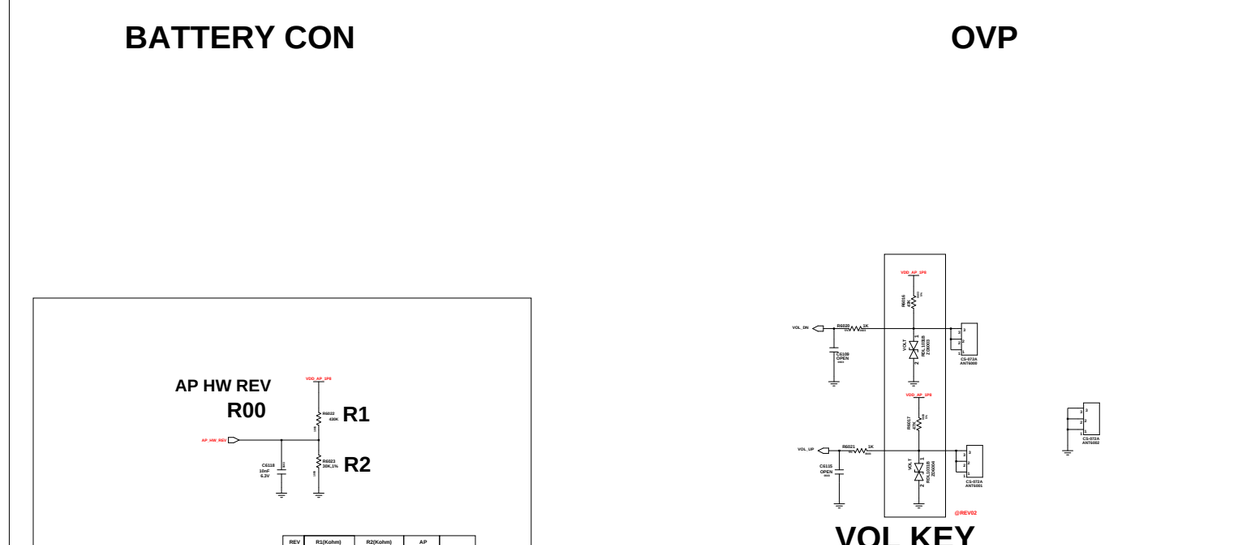

VOL KEY

AP HW REV

R00

NOT USE NC

REV	R1(Kohm)	R2(Kohm)	AP	
0	NC	0	R00	
1	430	30	R01/R02	
2	390	62		
3	360	91		
4	330	120		
5	300	150		
6	270	180		
7	240	220		
8	200	240		
9	180	270		
10	150	300		

Engineer:		M34_5G (Papaya)	
Drawn by:		TITLE: POWER/MOT/KEY	Size: A0
R&D CHK:			
DOC CTRL CHK:			
MFG ENGR CHK:			
Q-A CHK:	REV:	Drawing Number:	

Changed by: | Date Changed: | Time Changed:

SAMSUNG CONFIDENTIAL
THIS DOCUMENT CONTAINS CONFIDENTIAL PROPRIETARY INFORMATION THAT IS SAMSUNG ELECTRONICS CO'S PROPERTY. DO NOT DISCLOSE TO OR DUPLICATE FOR OTHERS EXCEPT AS AUTHORIZED BY SAMSUNG.

AUDIO & SENSOR PART

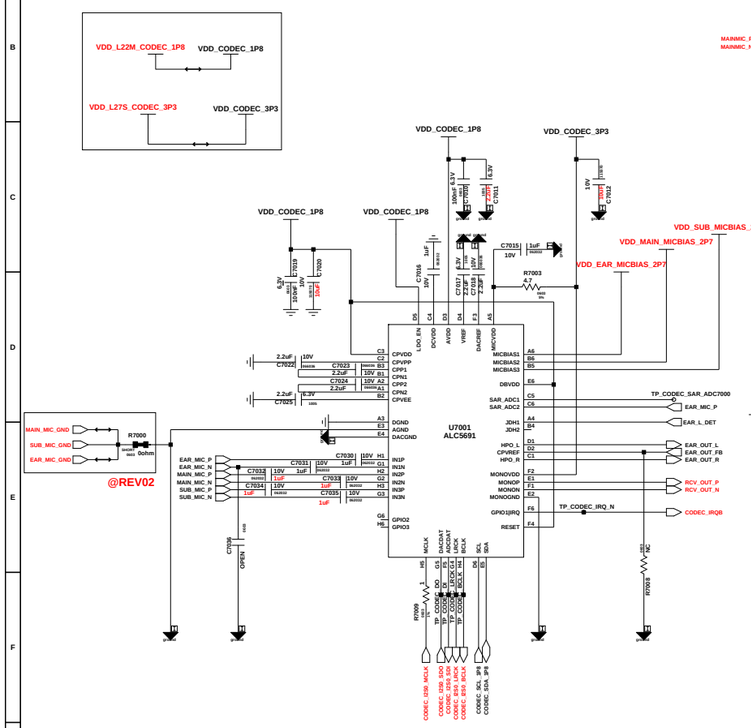

Audio CODEC

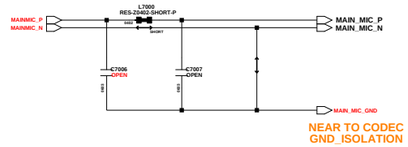

MAIN MIC

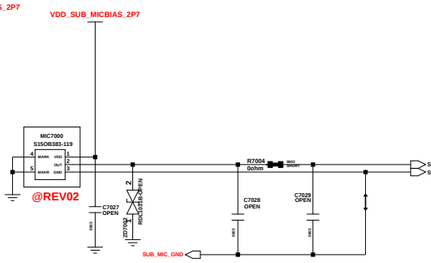

2nd MIC

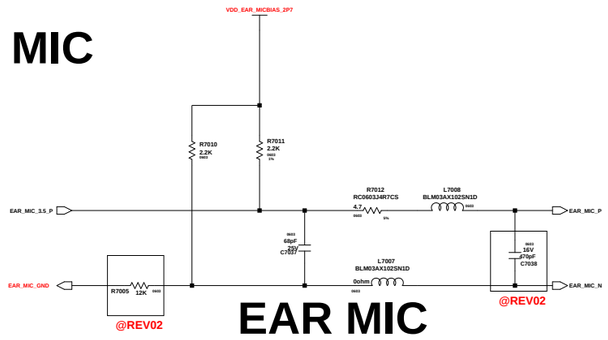

EAR MIC

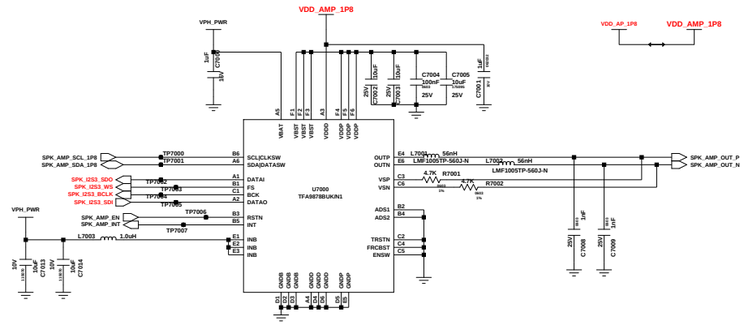

SPK AMP

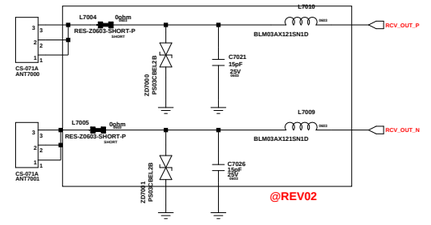

RCV CONTACT

DUAL SIM / T-FLASH (3in2)

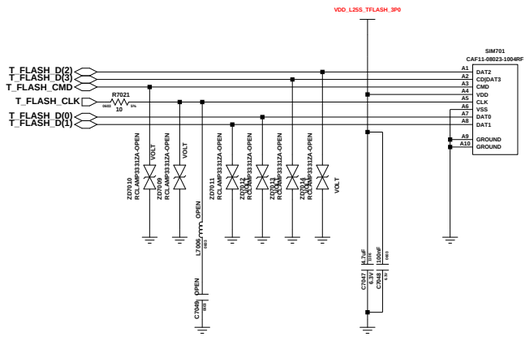

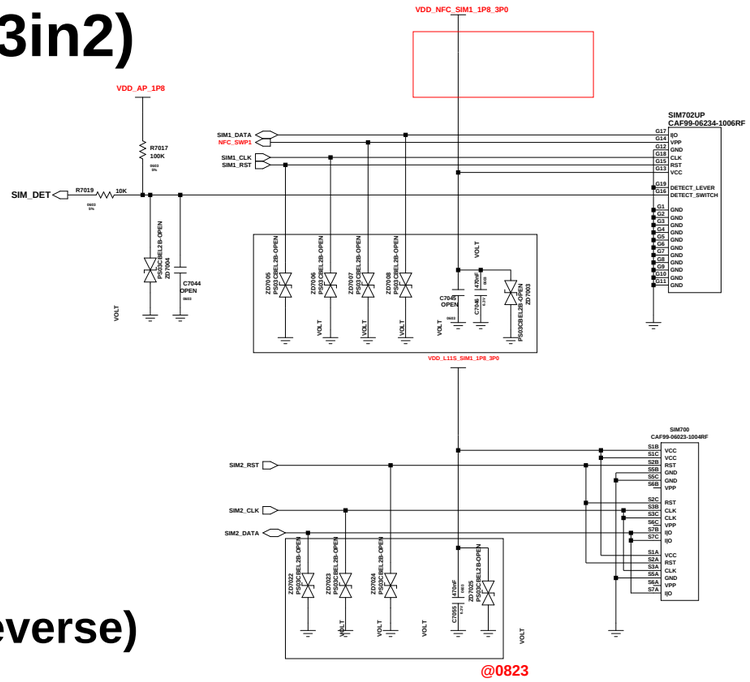

Stacked Dual SIM SOCKET (Reverse)

SENSOR

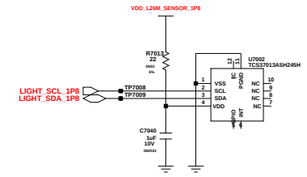

AMBIENT SENSOR

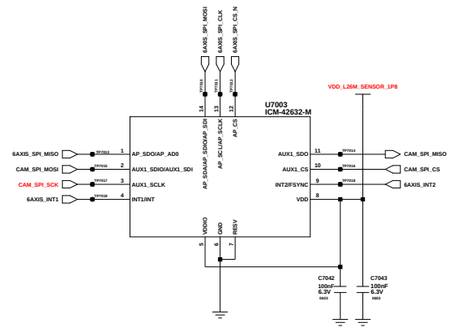

ACC&GYRO SENSOR

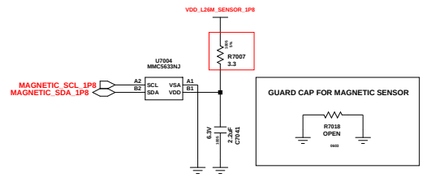

MAGNETIC SENSOR

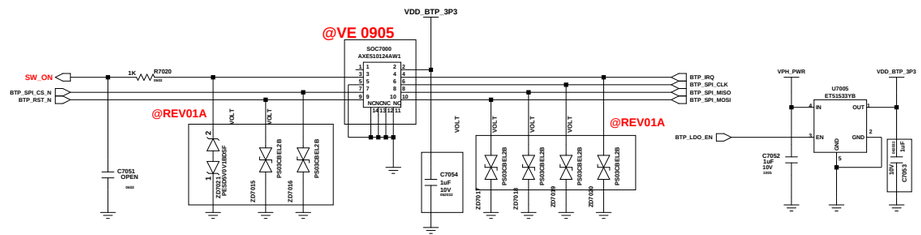

PWR & SIDE FPS

Engineer:	
Drawn by:	M34 5G (Papaya)
R&D CHK:	TITLE:
DOC CTRL CHK:	Size: A1
MFG ENGR CHK:	

Changed by:	Date Changed:	Time Changed:	QA CHK:	REV	Drawing Number:	Page:

SAMSUNG CONFIDENTIAL
THIS DOCUMENT CONTAINS CONFIDENTIAL PROPRIETARY INFORMATION THAT IS SAMSUNG ELECTRONICS CO'S PROPERTY. DO NOT DISCLOSE TO OR DUPLICATE FOR OTHERS EXCEPT AS AUTHORIZED BY SAMSUNG.

CAMERA

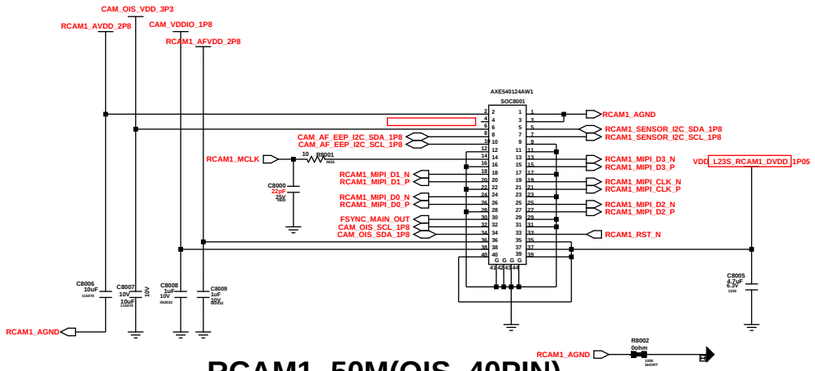

RCAM1_50M(OIS_40PIN)

COPY FROM SM-A235

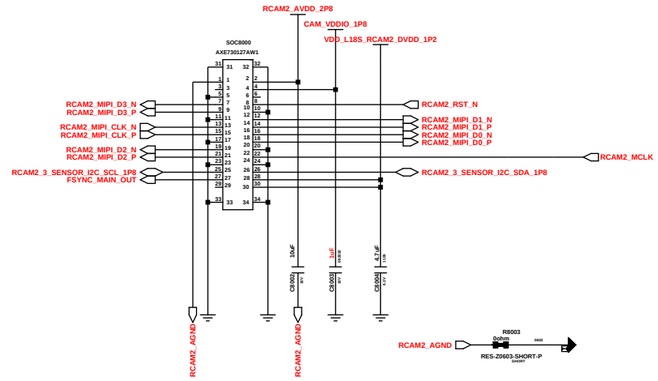

RCAM2_8M_UW (30pin)

COPY FROM SM-A346

F34 : OPEN

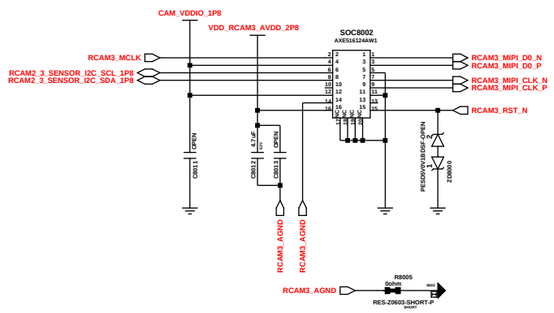

RCAM3_2M_MACRO (24PIN)_GC02M1

COPY FROM SM-A14

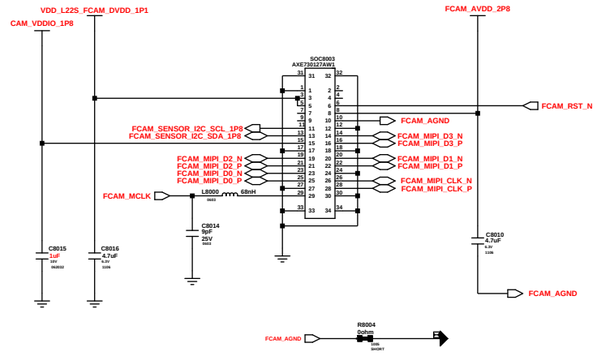

FRONT_13M FF (30PIN)

COPY FROM SM-A225

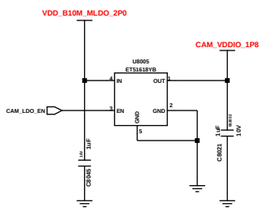

CAM_VDDIO

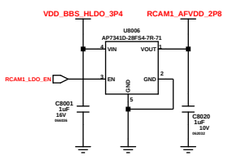

RCAM1_AFVDD

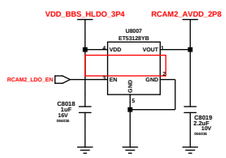

RCAM2_3_FACM_AVDD

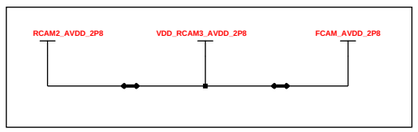

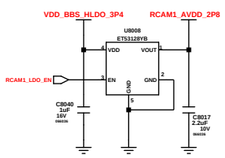

RCAM1_AVDD

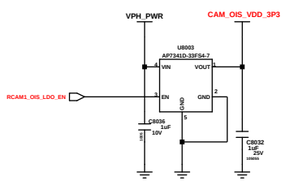

RCAM1_OIS

OIS MCU

0112

Engineer:	M34_5G (Papaya)
Drawn by:	
R&D CHK:	TITLE: CAMERA
DOC CTRL CHK:	Size: A1
MFG ENGR CHK:	
QA CHK:	REV: Drawing Number: Page: 7/8

Changed by: Date Changed: Time Changed:

SAMSUNG CONFIDENTIAL
THIS DOCUMENT CONTAINS CONFIDENTIAL
PROPRIETARY INFORMATION THAT IS
SAMSUNG ELECTRONICS CO'S PROPERTY.
DO NOT DISCLOSE TO OR DUPLICATE FOR OTHERS
EXCEPT AS AUTHORIZED BY SAMSUNG.

C2C (Conn to Conn FPCB)

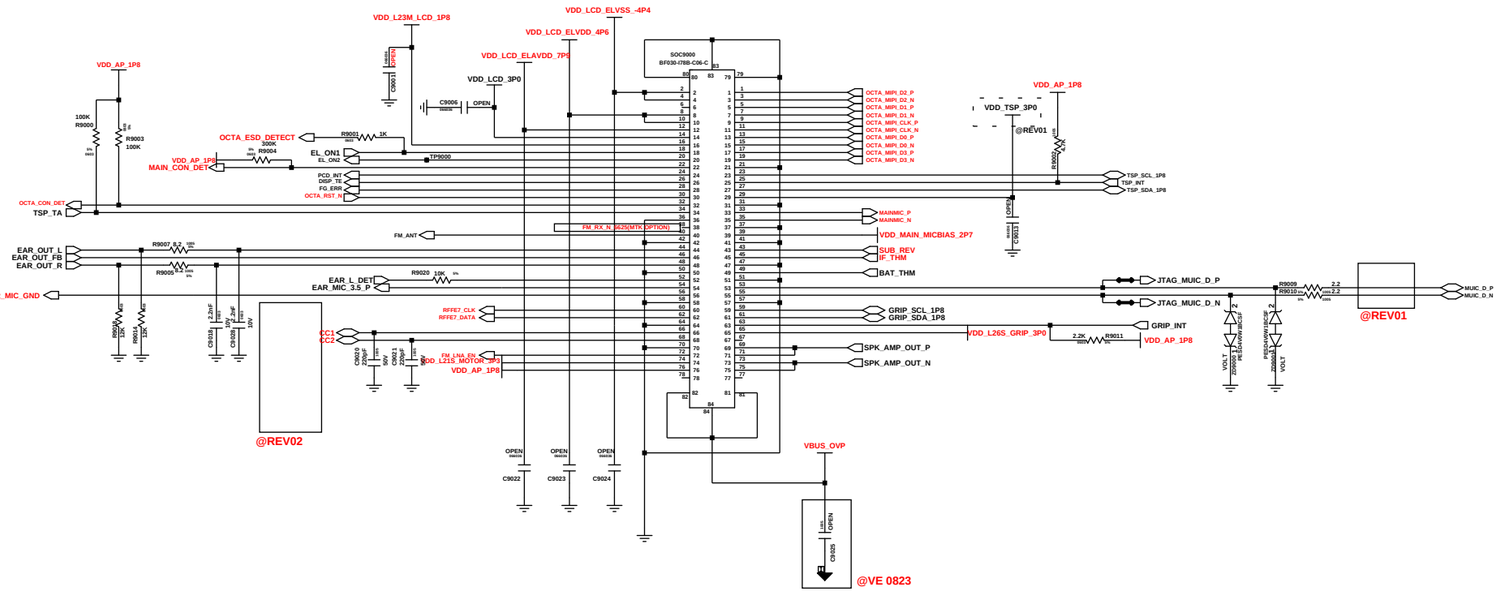

DISPLAY

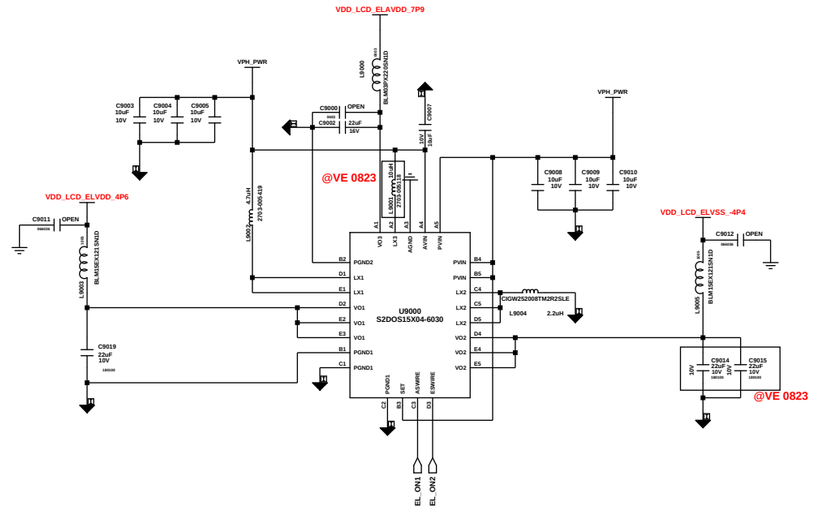

OCTA DCDC

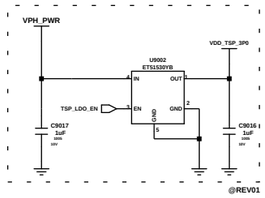

TSP LDO

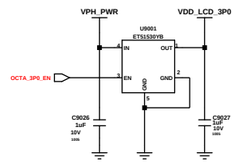

DISPLAY LDO

SHIELD CAN/BOTH HOLE

2D BARCODE

AP

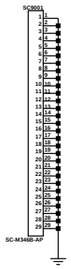

PMIC

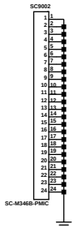

RF

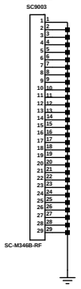

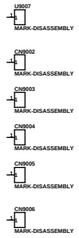

BT/WIFI

MEMORY

6GB/128GB — R9015 0ohm

8GB/128GB — R9016 0ohm

REGION

M346B_SWA — R9017 0ohm

E346B — R9019 0ohm

Engineer:	M34_5G (Papaya)
Drawn by:	
R&D CHK:	TITLE: MAIN CON / LCD DCDC
DOC CTRL CHK:	Size: A1
MFG ENGR CHK:	
QA CHK:	REV / Drawing Number: / Page: 1

Changed by: user20 | Date Changed: Thursday, June 18, 2015 | Time Changed: 10:18:28 am

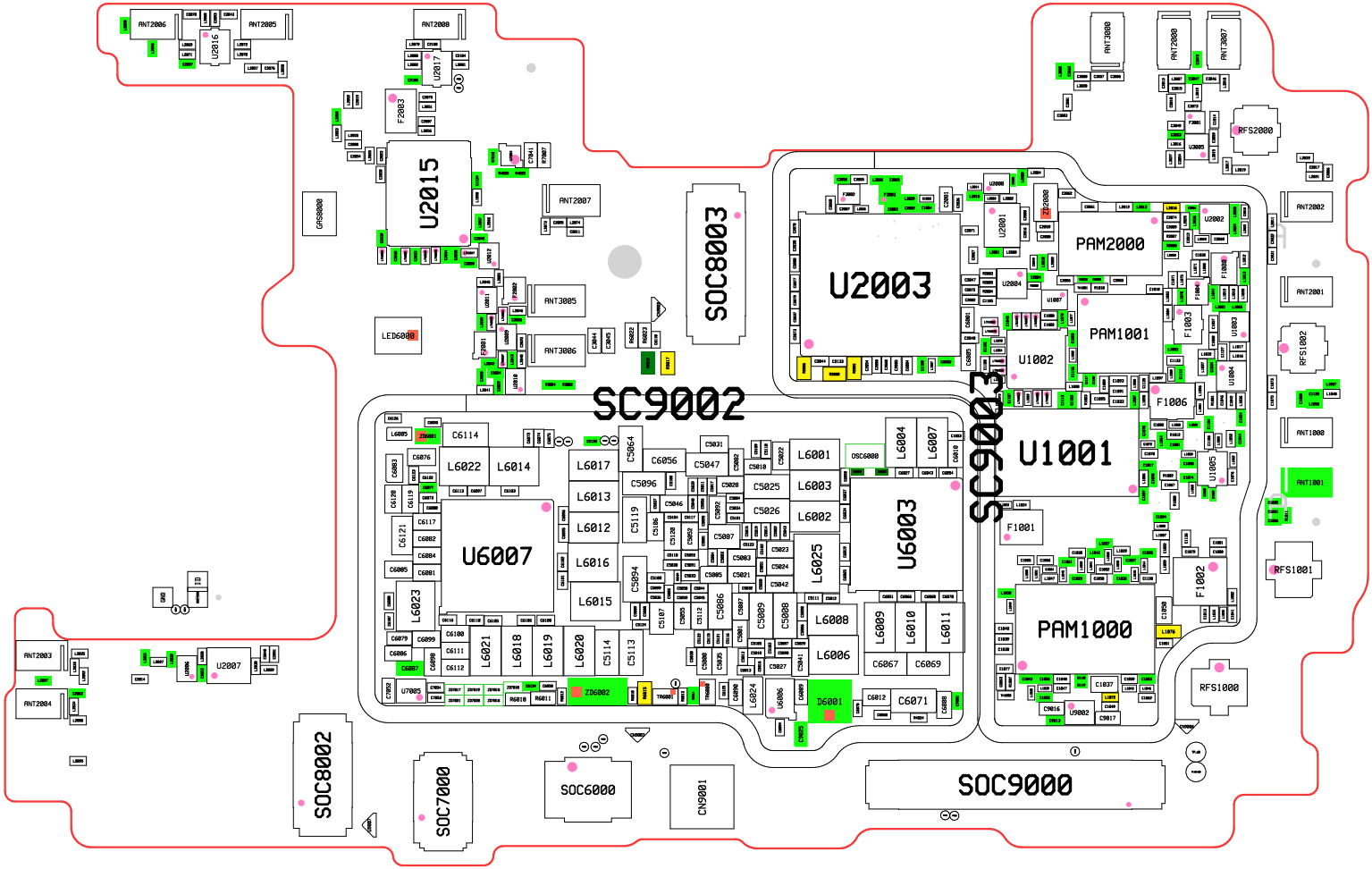

U2015
SOC8003
U2003
PAM2000
PAM1001
U1002
SC9002
SC9003
U1001
U6007
U6003
PAM1000
SOC8002
SOC7000
SOC6000
CN9001
SOC9000

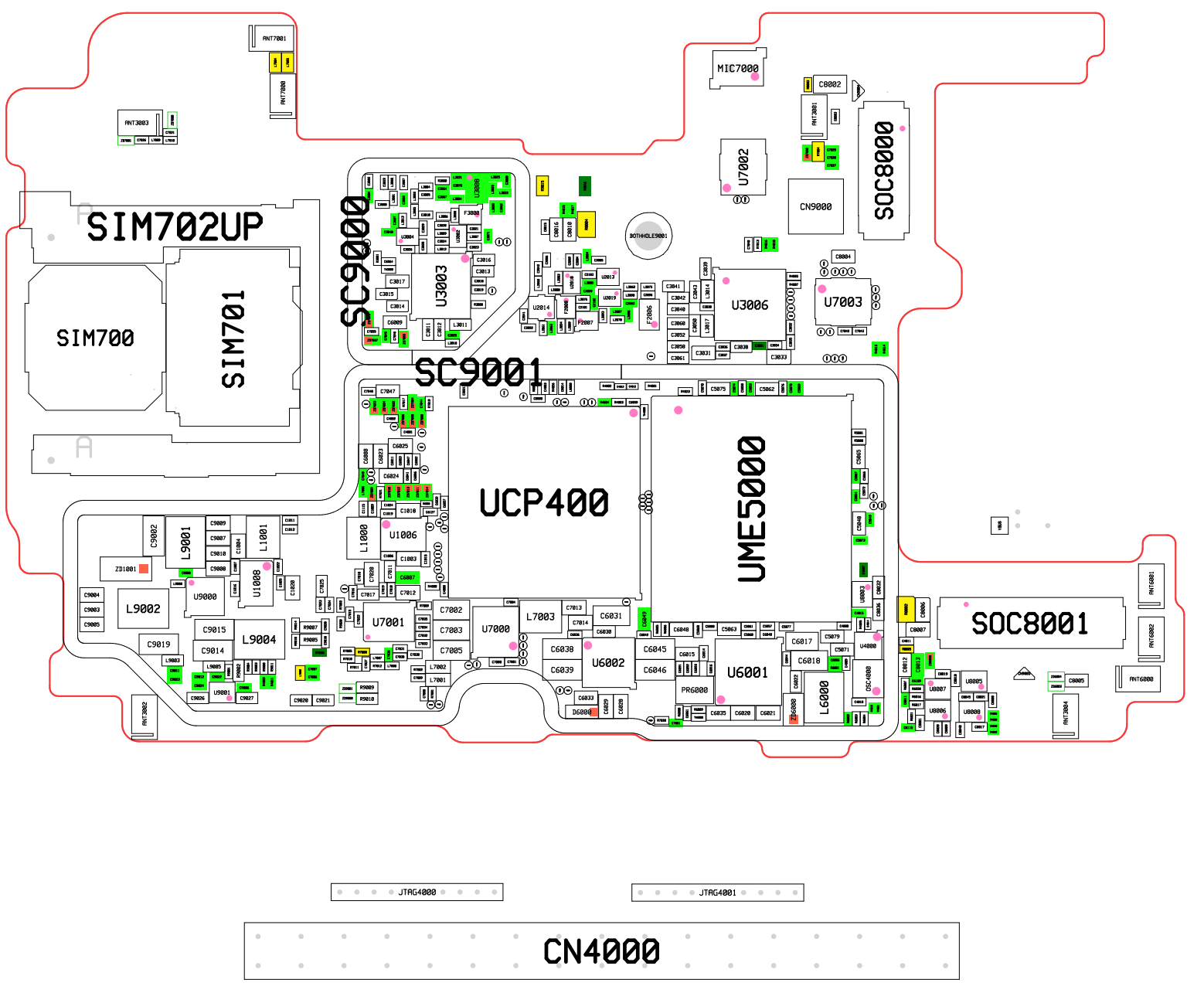

SIM702UP
SIM700
SIM701
SC9000
SC9001
UCP400
UME5000
SOC8000
SOC8001
MIC7000
U7002
CN9000
U3003
U3006
U7003
U1006
U1008
U9000
U7001
U7000
U6002
U6001
L9001
L9002
L9004
L1000
L1001
L7003
L6000
PR6000
ZD1001
JTAG4000
JTAG4001
CN4000